YAMAHA

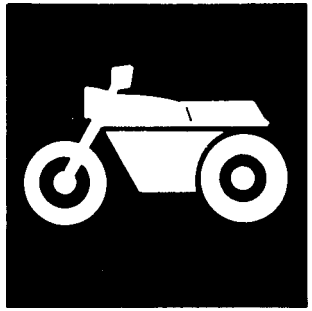

PARTS CATALOGUE

PW50 (5PG4) EUROPE,JAPAN

2A5PG–300E1

YAMAHA GENUINE Parts & Accessories

A2

PW50
PARTS CATALOGUE
©2001 by Yamaha Motor Co., Ltd.
1st Edition, May 2001
All rights reserved.
Any reprinting or unauthorized use
without the written permission of
Yamaha Motor Co., Ltd.
is expressly prohibited.

A3

A4

FOREWORD

This Parts Catalogue is related to the parts for the model(s) in the below frame. When you are ordering replacement parts, please refer to this Parts Catalogue and quote both part numbers and part names correctly.

PW50(5PG4)

1. Modifications or additions which have been made after issue of the Parts Catalogue will be announced in the Yamaha Parts News.
   It is advisable that you make necessary corrections to the Parts Catalogue according to the Yamaha Parts News.

2. Abbreviations
   The Following abbreviations are used in this Parts Catalogue.

   "UR" Use specified parts number.

   "UN" Use as many as needed.

   "AP" Alternate Parts

   "LM" Local Made (Parts need to be ordered locally)

   "F#" Frame No. (Applicable machine No.)

3. Parts, which are to be supplied in an assembly, are listed with a dot(.) in front of the part name as shown below.

   EXAMPLE

   CARBURETOR ASSY

   .JET, PILOT

   .NOZZLE, MAIN

4. Number of component for assembly
   The numeral appearing to the right of each component part indicates the quantity of parts for each assembly unit.

   EXAMPLE

PART NO.	DESCRIPTION	Q'TY	REMARKS
2F5–83310–60	FRONT FLASHER LIGHT ASSY	2	
115–83311–60	.BULB (6V–18W)	1	
1M1–83309–60	.REFLECTOR	1	

5. Applicable colors of graphics are represented in the "REMARKS" as shown below.

PART NO.	DESCRIPTION	Q'TY	REMARKS
2N4–24110–00–X5	.FUEL TANK COMP.	2	MXR
3J1–24240–10	.GRAPHIC, FUEL TANK	1	for MXR

6. Applicable Serial No.

   Engine Serial No.

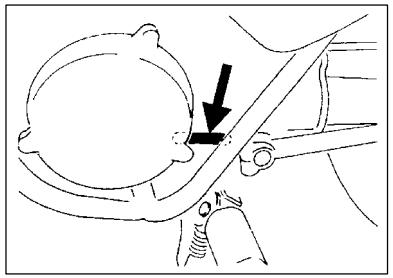

   Frame Serial No.

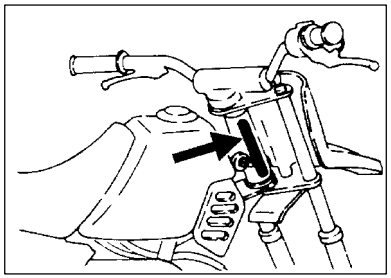

7. Note that the illustrations for reference in funding parts numbers, not to be used for assembling. When assembling, pleas use the applicable service manual.

8. The asterisk (*) before a reference number indicates modification items after the first edition.

MODEL LABEL

(1) A label called “Model Label” is affixed in the location as indicated in (3) below. When using this parts catalogue, please be sure to cross–refer the “model code – production code No.” in the catalogue to the “model code – production code No. “indicated on the Model Label affixed onto the product concemed.

(2) “Model Label”Indication

	a b
○	xxxx – xxx
●	x c

a: Model Type Code
b: Production Code No.
c: Colouring Type

○	4TW1–010
●	A

(3) Model Label Affixing Location

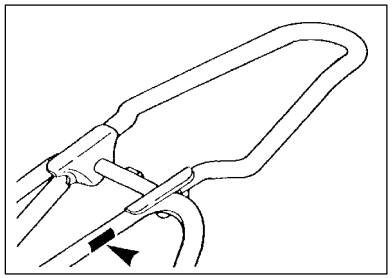

(4) Model Code – Production Code Number of Model Listed in This Parts Catalog

Model Code	Production Code No.	Country (destination)	Model Code	Production Code No.	Country (destination)
5PG4	010	AUSTRIA			
	020	BELGIUM			
	020	NETHERLANDS			
	030	SWITZERLAND			
	040	DENMARK			
	040	FINLAND			
	040	IRELAND			
	040	NORWAY			
	050	SPAIN			
	070	ENGLAND			
	080	GREECE			
	090	JAPAN			
	100	PORTUGAL			
	110	SWEDEN			
	120	S.AFRICA			

(5) Colouring Information

Colouring type code	Colour code	Colour Name	Abbrevi-ation
A	0583	DEEP PURPLISH BLUE SOLID E	DPBSE

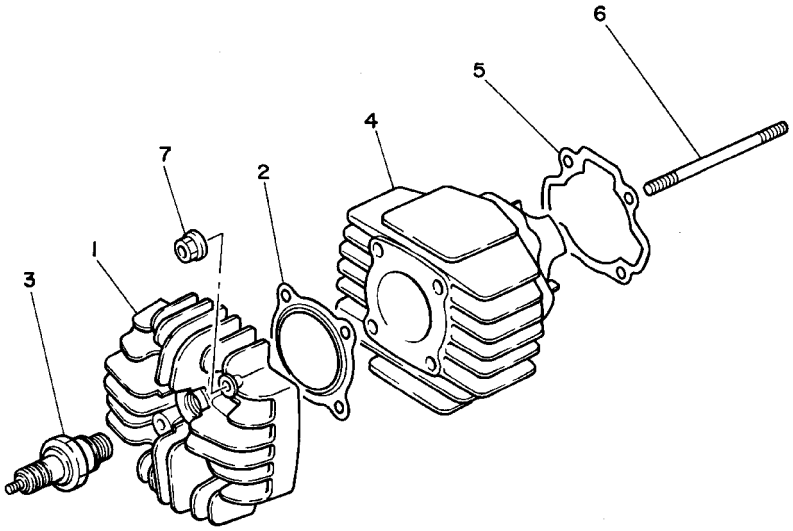

3PT110-0010

FIG. 1 CYLINDER

REF. NO.	PART NO.	DESCRIPTION	EUR	ZAF	JAN			REMARKS
1	4J2–11111–00	HEAD, CYLINDER 1	1	1	1			
2	517–11181–00	GASKET, CYLINDER HEAD 1	1	1	1			
3	94701–00258	PLUG, SPARK (NGK BPR4HS)	1	1				
	94703–00258	PLUG, SPARK			1			
4	4J2–11311–00	CYLINDER 1	1	1	1			
5	3PT–11351–00	GASKET, CYLINDER	1	1	1			
6	90116–06418	BOLT, STUD	4	4	4			
7	95707–06500	NUT, FLANGE	4	4	4			

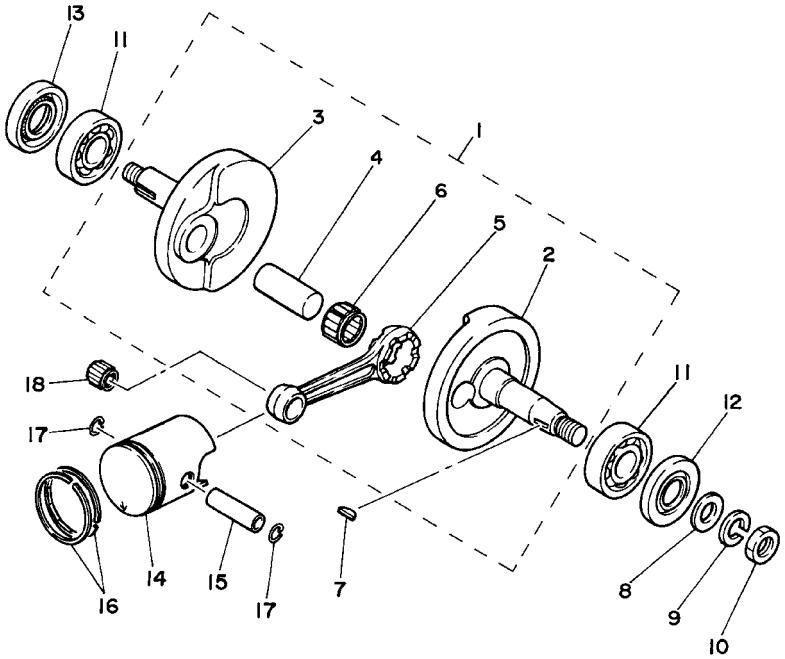

3PT110-0020

FIG. 2 CRANKSHAFT. PISTON

REF. NO.	PART NO.	DESCRIPTION	EUR	ZAF	JAN			REMARKS
1	3L5–11400–01	CRANKSHAFT ASSY	1	1	1			
2	3L5–11412–00	.CRANK 1	1	1	1			
3	3L5–11422–01	.CRANK 2	1	1	1			
4	54U–11681–00	.PIN, CRANK 1	1	1	1			
5	2E9–11651–00	.ROD, CONNECTING	1	1	1			
6	93310–416N7	.BEARING	1	1	1			
7	90280–03017	KEY, WOODRUFF	1	1	1			
8	92907–12600	WASHER	1	1	1			
9	92907–12100	WASHER	1	1	1			
10	95307–12700	NUT	1	1	1			
11	93306–20326	BEARING	2	2	2			
12	93102–17067	OIL SEAL	1	1	1			
13	93102–23174	OIL SEAL	1	1	1			
14	18U–11631–00–A0	PISTON (STD)	1	1	1			
	18U–11635–00	PISTON (0.25MM O/S)	1	1	1			AP
	18U–11636–00	PISTON (0.50MM O/S)	1	1	1			AP
15	3L5–11633–00	PIN, PISTON	1	1	1			
16	260–11610–04	PISTON RING SET (STD)	1	1	1			
	260–11610–14	PISTON RING SET (0.25MM O/S)	1	1	1			AP
	260–11610–24	PISTON RING SET (0.50MM O/S)	1	1	1			AP
17	93450–11021	CIRCLIP	2	2	2			
18	93310–21038	BEARING	1	1	1			

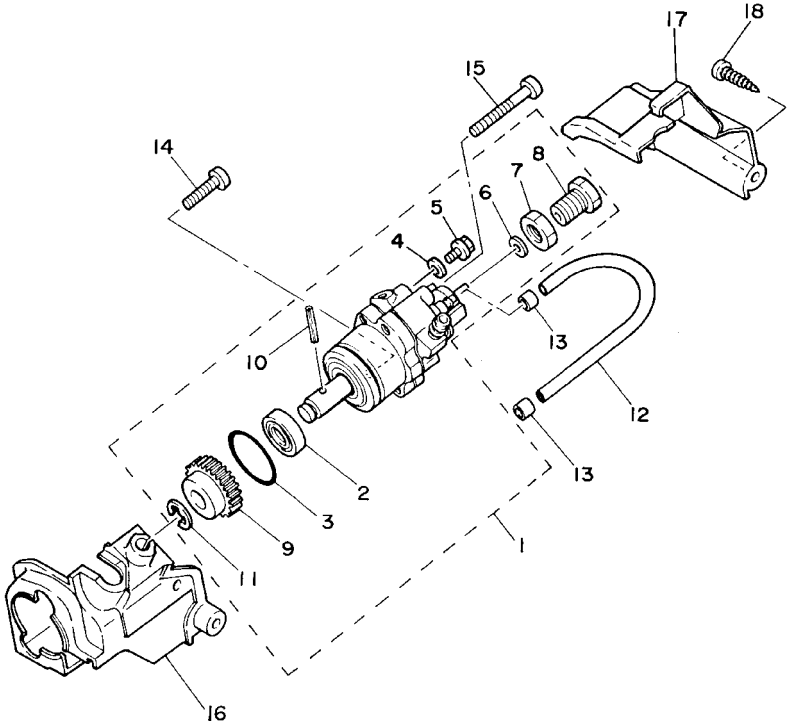

3PT110-0030

FIG. 3 OIL PUMP

REF. NO.	PART NO.	DESCRIPTION	EUR	ZAF	JAN			REMARKS
1	3L5–13101–00	OIL PUMP ASSY	1	1	1			
2	93101–10001	.OIL SEAL	1	1	1			
3	93210–26240	.O–RING	1	1	1			
4	90430–04004	.GASKET	1	1	1			
5	90149–04135	.SCREW	1	1	1			
6	384–13138–00	.PLATE, ADJUSTING	1	1	1			
7	90170–10105	.NUT	1	1	1			
8	90401–10029	.BOLT, UNION	1	1	1			
9	3L5–13124–00	.GEAR, WORM WHEEL (56T)	1	1	1			
10	91609–30014	.PIN, SPRING	1	1	1			
11	93430–07012	.CIRCLIP	1	1	1			
12	3L5–13161–00	PIPE, DELIVERY 1	1	1	1			
13	90468–02033	CLIP	2	2	2			
14	98507–05020	SCREW, PAN HEAD	1	1	1			
15	98507–05035	SCREW, PAN HEAD	1	1	1			
16	3L5–15416–00	COVER, OIL PUMP	1	1	1			
17	3L5–15426–00	COVER, OIL PUMP 2	1	1	1			
18	97707–50115	SCREW, TAPPING	1	1	1			

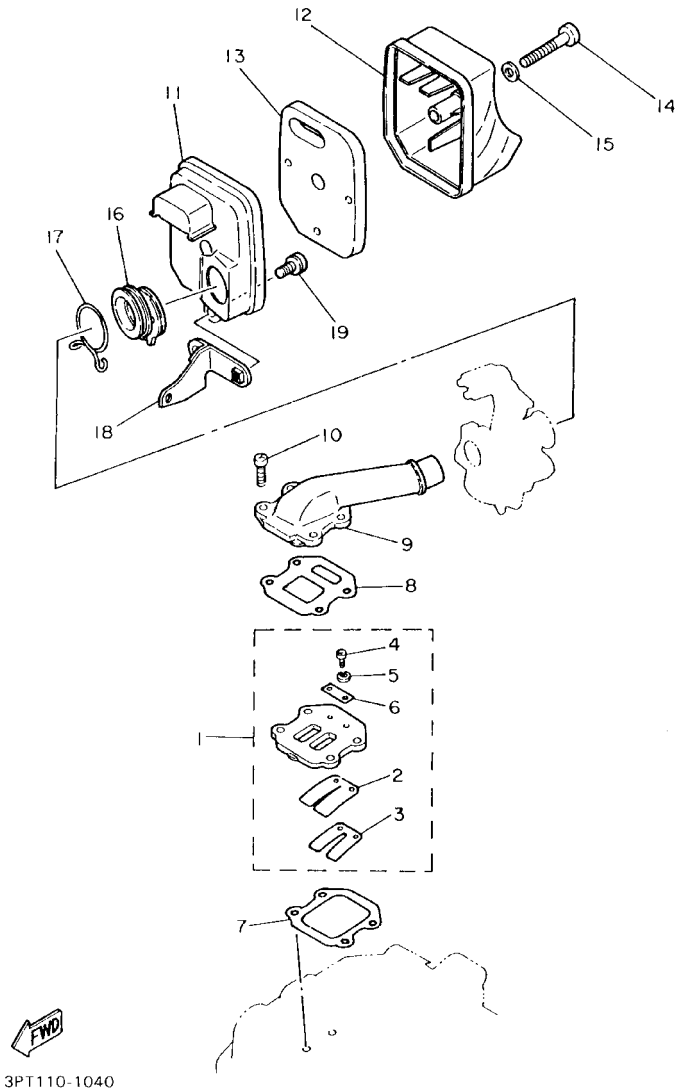

FIG. 4 INTAKE

REF. NO.	PART NO.	DESCRIPTION	EUR	ZAF	JAN			REMARKS
1	3L5–13610–00	REED VALVE ASSY	1	1	1			
2	3L5–13613–00	.REED, VALVE	1	1	1			
3	3L5–13616–00	.STOPPER, REED VALVE	1	1	1			
4	98507–03010	.SCREW, PAN HEAD	2	2	2			
5	92907–03100	.WASHER	2	2	2			
6	3L5–13624–00	.PLATE,REED VALVE	1	1	1			
7	3HK–13621–00	GASKET, VALVE SEAT	1	1	1			
8	3L5–13622–10	GASKET, VALVE SEAT	1	1	1			
9	3L5–13555–00	MANIFOLD, INTAKE	1	1	1			
10	98507–06020	SCREW, PAN HEAD	4	4	4			
11	4X4–14411–00	CASE, AIR CLEANER 1	1	1	1			
12	4X4–14412–00	CAP, CLEANER CASE 1	1	1	1			
13	4X4–14451–00	ELEMENT, AIR CLEANER	1	1	1			
14	98507–06045	SCREW, PAN HEAD	1	1	1			
15	92907–06600	WASHER, PLATE	1	1	1			
16	4X4–14453–00	JOINT, AIR CLEANER 1	1	1	1			
17	90467–20023	CLIP	1	1	1			
18	4X4–14493–01	STAY 1	1	1	1			
19	90159–06013	SCREW, WITH WASHER	1	1	1			

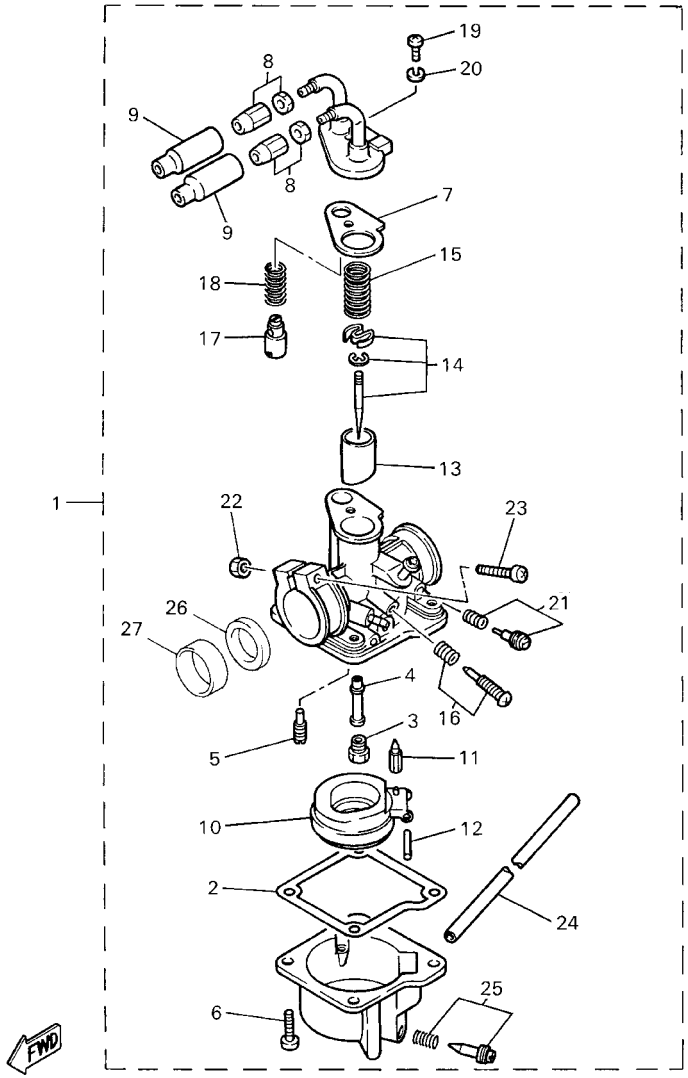

5PG3100-2050

FIG. 5 CARBURETOR

REF. NO.	PART NO.	DESCRIPTION	EUR	ZAF	JAN			REMARKS
1	4X4–14101–00	CARBURETOR ASSY 1	1	1	1			
2	3L5–14184–00	.GASKET, FLOAT CHAMBER	1	1	1			
3	620–14231–14	.JET, MAIN (# 70)	1	1	1			STD
	620–14231–13	.JET, MAIN (# 65)	1	1	1			UR
	620–14231–15	.JET, MAIN (# 75)	1	1	1			UR
4	3L7–14141–12	.NOZZLE, MAIN	1	1	1			
5	3L5–14142–40	.JET, PILOT (# 40)	1	1	1			
6	98502–04014	.SCREW, PAN HEAD	4	4	4			
7	3L5–14198–00	.GASKET	1	1	1			
8	17L–14106–00	.CABLE ADJUST SCREW SET	2	2	2			
9	1R0–14169–00	.CAP	2	2	2			
10	3L6–14185–01	.FLOAT	1	1	1			
11	3L5–14190–01	.NEEDLE VALVE ASSY	1	1	1			
12	603–14186–00	.PIN, FLOAT	1	1	1			
13	3L5–14112–40	.VALVE, THROTTLE 1	1	1	1			
14	36R–1490J–00	.NEEDLE SET	1	1	1			
15	174–14131–01	.SPRING, THROTTLE VALVE	1	1	1			
16	36R–14103–00	.THROTTLE SCREW SET	1	1	1			
17	127–14171–00	.PLUNGER, STARTER	1	1	1			
18	509–14135–00	.SPRING, PLUNGER	1	1	1			
19	98502–05012	.SCREW, PAN HEAD	1	1	1			
20	92902–05100	.WASHER, SPRING	1	1	1			
21	17L–14104–00	.AIR SCREW SET	1	1	1			
22	98802–05100	.NUT	1	1	1			
23	98502–05030	.SCREW, PAN HEAD	1	1	1			
24	214–14197–00	.PIPE	1	1	1			
25	17L–14104–00	.AIR SCREW SET	1	1	1			

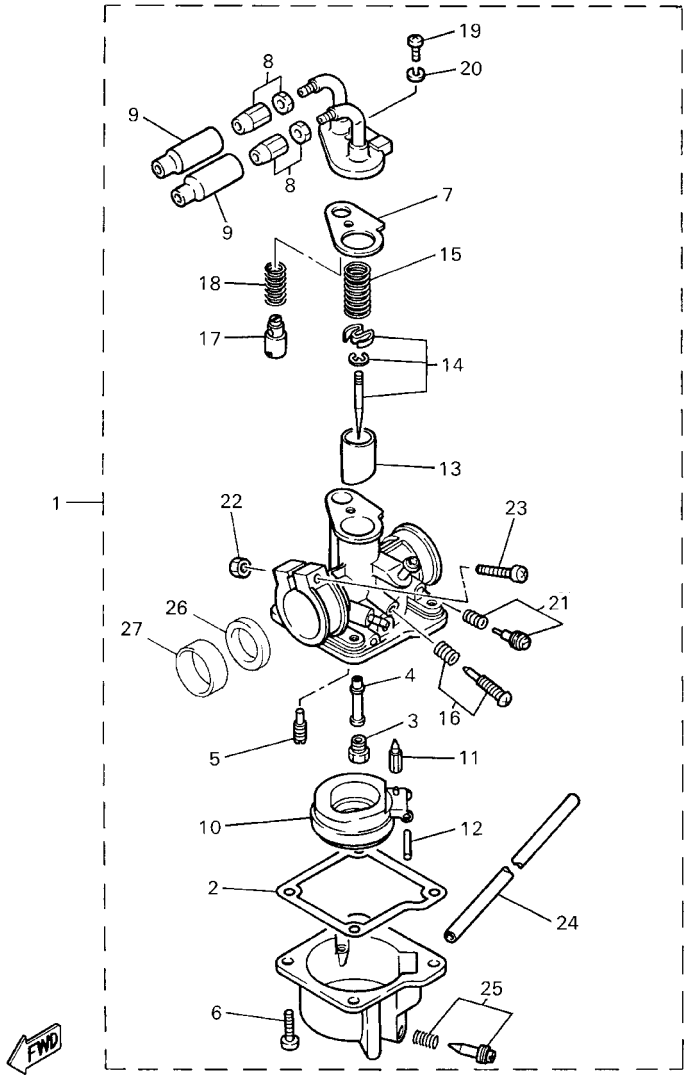

5PG3100-2050

FIG. 5 CARBURETOR

REF. NO.	PART NO.	DESCRIPTION	EUR	ZAF	JAN			REMARKS
26	1M3–14997–00	.SEAL	1	1	1			
27	1V3–14271–00	.INSULATOR	1	1	1			

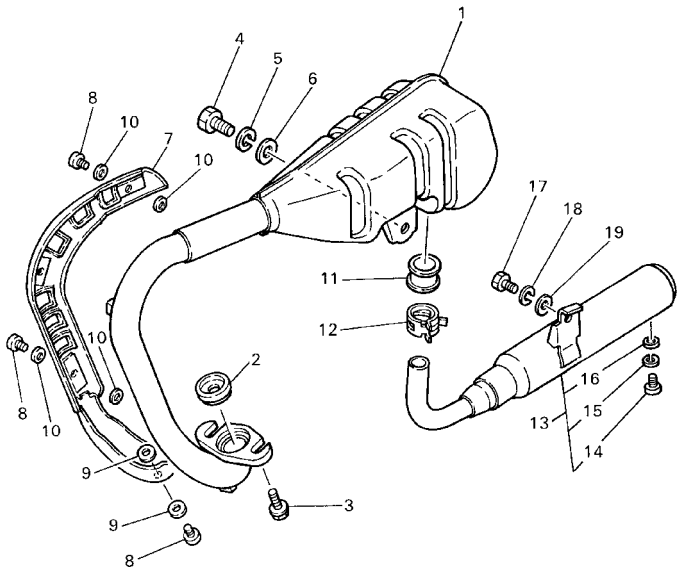

3PT100-5060

FIG. 6 EXHAUST

REF. NO.	PART NO.	DESCRIPTION	EUR	ZAF	JAN			REMARKS
1	4X4–14610–01	EXHAUST PIPE ASSY 1	1	1	1			
2	4X4–14623–10	GASKET, EXHAUST PIPE	1	1	1			
3	90149–06113	SCREW	2	2	2			
4	97007–08020	BOLT	1	1	1			
5	92907–08100	WASHER, SPRING	1	1	1			
6	92907–08600	WASHER, PLATE	1	1	1			
7	4X4–14708–00	PROTECTOR ASSY	1	1	1			
8	90157–05003	SCREW, PAN HEAD	4	4	4			
9	90202–04214	WASHER, PLATE	2	2	2			
10	3RV–14766–00	WASHER, PROTECTOR	6	6	6			
11	4X4–14714–00	GASKET, MUFFLER	1	1	1			
12	90467–22048	CLIP	1	1	1			
13	4X4–14750–00	SILENCER ASSY	1	1	1			
14	98507–06008	.SCREW, PAN HEAD	1	1	1			
15	92907–06100	.WASHER, SPRING	1	1	1			
16	92907–06600	.WASHER, PLATE	1	1	1			
17	97007–06016	BOLT	1	1	1			
18	92907–06100	WASHER, SPRING	1	1	1			
19	92907–06600	WASHER, PLATE	1	1	1			

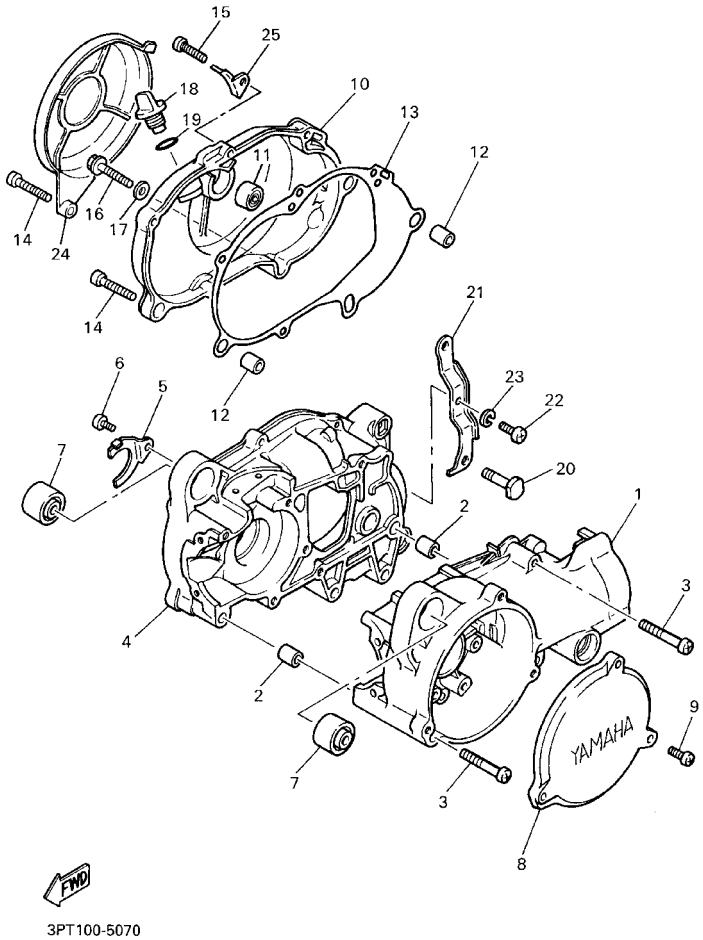

FIG. 7 CRANKCASE

REF. NO.	PART NO.	DESCRIPTION	EUR	ZAF	JAN			REMARKS
1	4X4–15111–00	CRANKCASE 1	1	1	1			
2	99530–12016	PIN, DOWEL	2	2	2			
3	98507–06045	SCREW, PAN HEAD	8	8	8			
4	4J2–15121–01	CRANKCASE 2	1	1	1			
5	3L5–15128–00	HOLDER	1	1	1			
6	98507–06012	SCREW, PAN HEAD	1	1	1			
7	2E9–15316–00	DAMPER, ENGINE MOUNT 1	2	2	2			
8	4J2–15415–00	COVER, GENERATOR	1	1	1			
9	98507–05014	SCREW, PAN HEAD	3	3	3			
10	4X4–15421–02	COVER, CRANKCASE 2	1	1	1			
11	3L5–17112–01	BUSH 1	1	1	1			
12	99530–12016	PIN, DOWEL	2	2	2			
13	3L5–15451–11	GASKET, CRANKCASE COVER 1	1	1	1			
14	98507–06035	SCREW, PAN HEAD	3	3	3			
15	98507–06025	SCREW, PAN HEAD	3	3	3			
16	90105–08103	BOLT, WASHER BASED	1	1	1			
17	90430–08119	GASKET	1	1	1			
18	4J2–15363–00	PLUG, OIL	1	1	1			
19	93210–14104	O–RING	1	1	1			
20	90109–08582	BOLT	2	2	2			
21	4J2–15113–00	PLATE	1	1	1			
22	98507–06012	SCREW, PAN HEAD	1	1	1			
23	92907–06100	WASHER, SPRING	1	1	1			
24	4X4–15491–00	PROTECTOR	1	1	1			
25	4X4–15484–00	CLAMP 2	1	1	1			

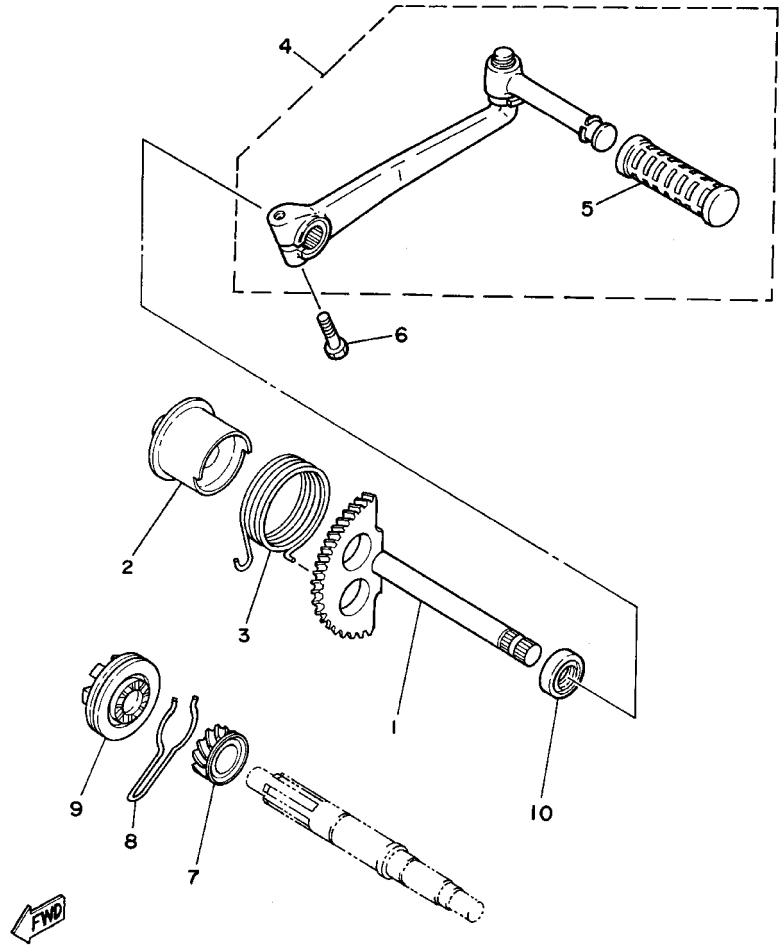

3PT110-0080

FIG. 8 STARTER

REF. NO.	PART NO.	DESCRIPTION	EUR	ZAF	JAN			REMARKS
1	3L5–15601–00	KICK SHAFT ASSY	1	1	1			
2	3L5–15664–00	GUIDE, SPRING	1	1	1			
3	90508–28399	SPRING, TORSION	1	1	1			
4	17J–15620–01	KICK CRANK ASSY	1	1	1			
5	2T4–15618–00	.COVER, KICK LEVER	1	1	1			
6	97017–06025	BOLT	1	1	1			
7	3L5–15631–00	GEAR, KICK PINION (13T)	1	1	1			
8	3L5–15673–00	CLIP	1	1	1			
9	3L5–13178–00	GEAR, PUMP DRIVE	1	1	1			
10	93109–15001	OIL SEAL	1	1	1			

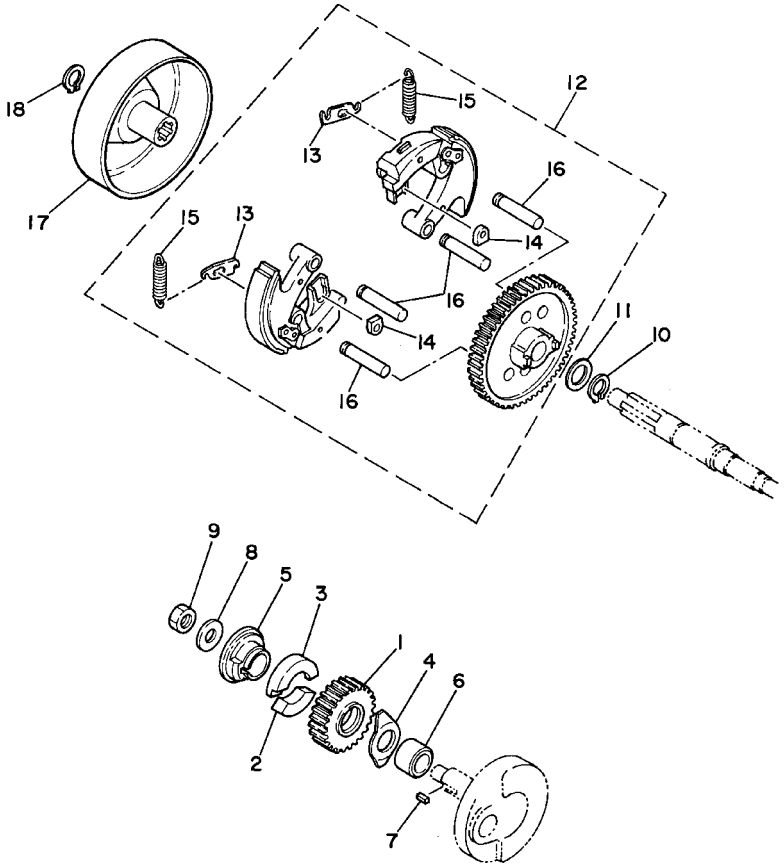

3PT110-0090

FIG. 9 CLUTCH

REF. NO.	PART NO.	DESCRIPTION	EUR	ZAF	JAN			REMARKS
1	3L5–16111–00	GEAR, PRIMARY DRIVE (33T)	1	1	1			
2	3L5–16115–00	ABSORBER 1	1	1	1			
3	3L5–16125–00	ABSORBER 2	1	1	1			
4	3L5–16114–00	PLATE, THRUST 2	1	1	1			
5	3L5–16181–01	SPACER 1	1	1	1			
6	90387–16730	COLLAR	1	1	1			
7	90282–05034	KEY, STRAIGHT	1	1	1			
8	90208–10012	WASHER, CONICAL SPRING	1	1	1			
9	90170–10206	NUT	1	1	1			
10	99009–16400	CIRCLIP	1	1	1			
11	90201–16383	WASHER, PLATE	1	1	1			
12	3L5–16620–03	CLUTCH CARRIER ASSY	1	1	1			
13	3L5–16628–02	.WASHER	2	2	2			
14	2T4–16629–00	.DAMPER, CLUTCH WEIGHT	2	2	2			
15	3L5–16627–02	.SPRING, CLUTCH WEIGHT 2	2	2	2			
16	3L5–16633–02	.SHAFT, CLUTCH WEIGHT	4	4	4			
17	3L5–16611–02	CLUTCH HOUSING COMP.	1	1	1			
18	99009–16400	CIRCLIP	1	1	1			

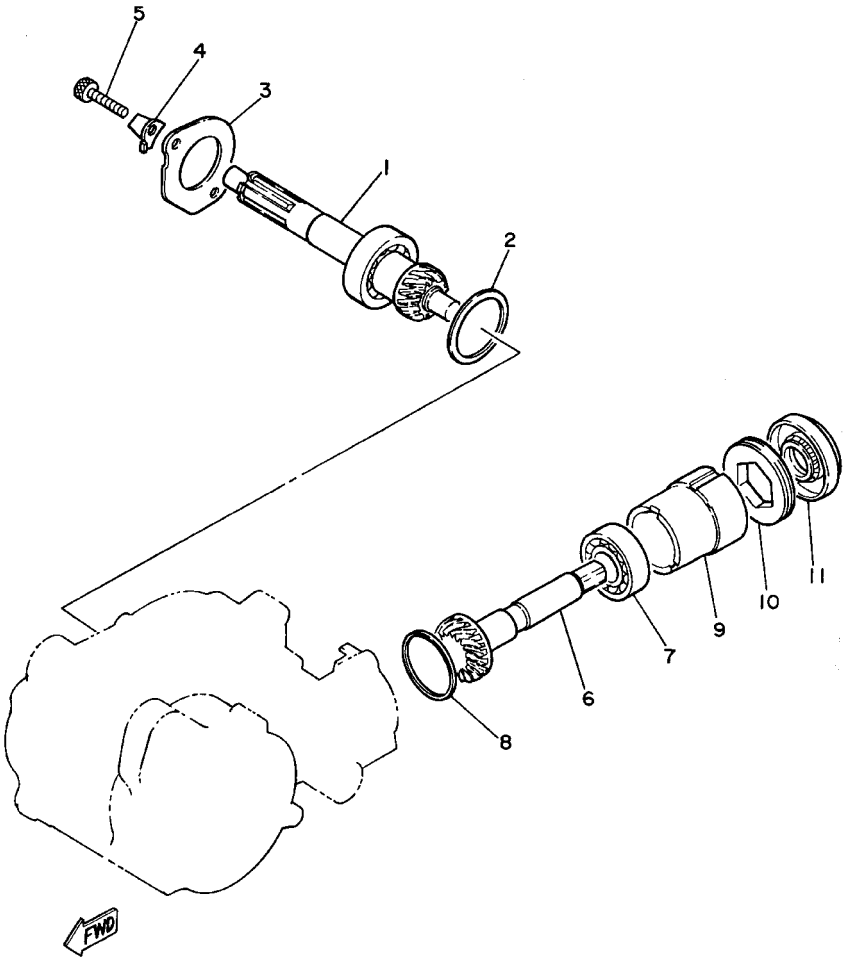

3PT110-0100

FIG. 10 TRANSMISSION

REF. NO.	PART NO.	DESCRIPTION	EUR	ZAF	JAN			REMARKS
1	3L5–17410–00	MAIN AXLE COMP. (15T)	1	1	1			
2	3L5–17531–00	SHIM, PINION	1	1	1			
3	3L5–17471–00	PLATE, COVER	1	1	1			
4	3L5–17473–00	STOPPER	1	1	1			
5	91318–06016	BOLT	2	2	2			
6	15L–17552–00	PINION, DRIVEN	1	1	1			
7	93306–20301	BEARING	1	1	1			
8	3L5–17537–00	SHIM, THRUST	1	1	1			
9	3L5–17442–00	COLLAR, DISTANCE	1	1	1			
10	90149–45134	SCREW	1	1	1			
11	93102–15267	OIL SEAL	1	1	1			

FIG. 11 FRAME

REF. NO.	PART NO.	DESCRIPTION	EUR	ZAF	JAN			REMARKS
1	36E–21110–01–33	FRAME COMP.	1	1	1			YB
2	95607–10200	NUT, SELF–LOCKING	1	1	1			
3	90105–10731	BOLT, WASHER BASED	1	1	1			

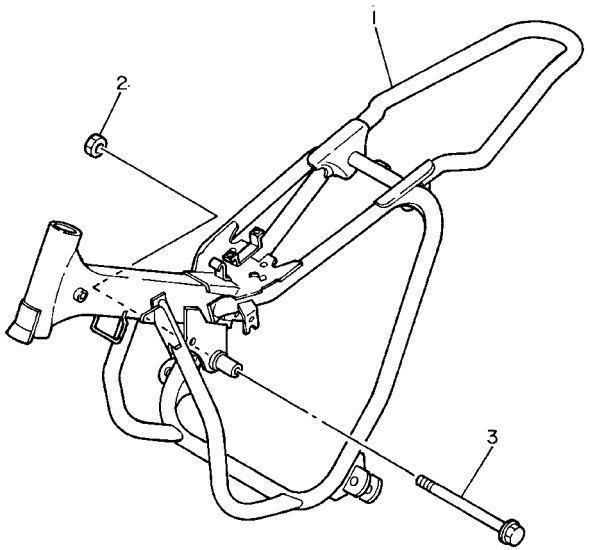

3PT351-0110

FIG. 12 FRONT FENDER

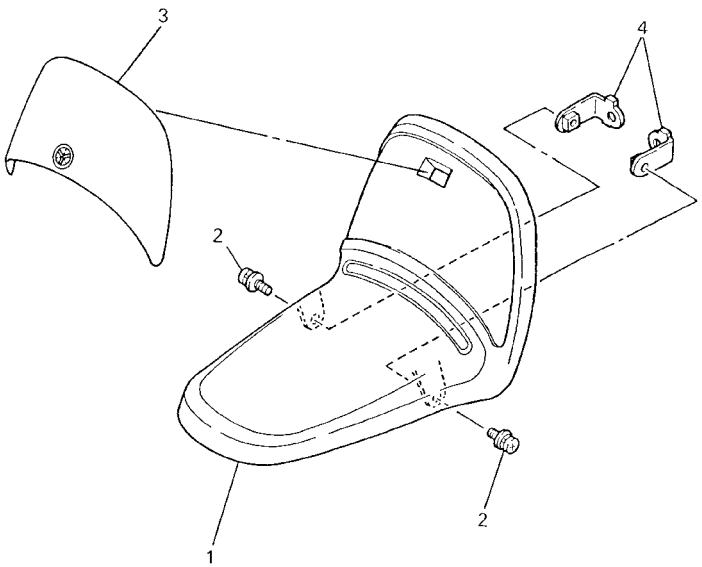

5PG1100-1120

REF. NO.	PART NO.	DESCRIPTION	EUR	ZAF	JAN			REMARKS
1	3PT–21511–20	FENDER, FRONT	1	1	1			
2	90159–06060	SCREW, WITH WASHER	2	2	2			
3	3PT–21569–70	GRAPHIC 1	1	1	1			
4	36E–21513–00	STAY, FENDER 1	2	2	2			

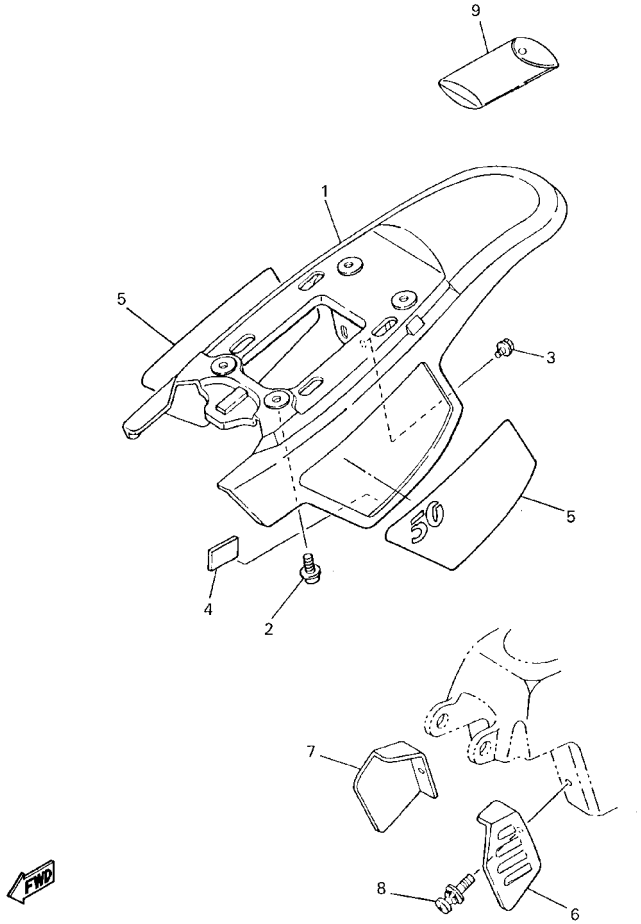

3PT100-8130

FIG. 13 SIDE COVER

REF. NO.	PART NO.	DESCRIPTION	EUR	ZAF	JAN			REMARKS
1	3PT–21711–10	COVER, SIDE 1	1	1	1			
2	90159–06060	SCREW, WITH WASHER	4	4	4			
3	90119–06060	BOLT, WITH WASHER	2	2	2			
4	4X4–24181–00	DAMPER, LOCATING 1	2	2	2			
5	3PT–2173L–60	GRAPHIC SET 1	1	1	1			
6	3PT–21731–60	COVER, SIDE 3	1	1	1			
7	3PT–21741–60	COVER, SIDE 4	1	1	1			
8	90159–06058	SCREW, WITH WASHER	2	2	2			
9	4X4–28100–00	TOOL KIT	1	1	1			

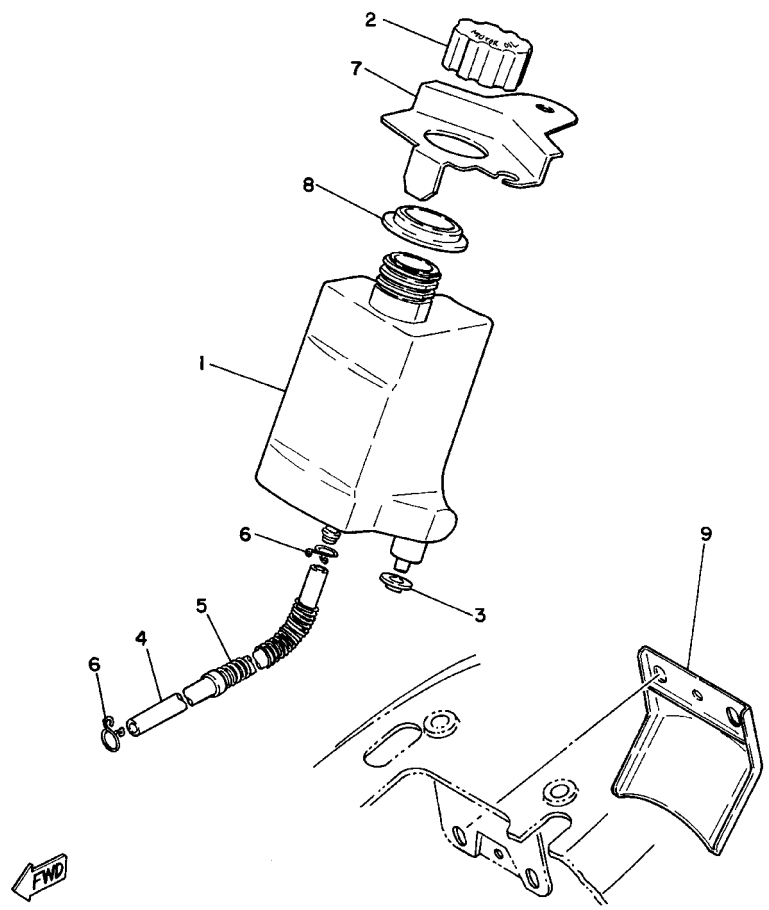

3PT110-0140

FIG. 14 OIL TANK

REF. NO.	PART NO.	DESCRIPTION	EUR	ZAF	JAN			REMARKS
1	4X4–21751–00	TANK, OIL	1	1	1			
2	1Y1–21770–01	OIL TANK CAP ASSY	1	1	1			
3	90480–10408	GROMMET	2	2	2			
4	4X4–21766–01	PIPE, OIL	1	1	1			
5	90501–08410	SPRING, COMPRESSION	1	1	1			
6	90467–08003	CLIP	2	2	2			
7	4X4–2172K–00	BRACKET 1	1	1	1			
8	4X4–21773–00	GROMMET	1	1	1			
9	4X4–21629–00	GUARD, MUD	1	1	1			

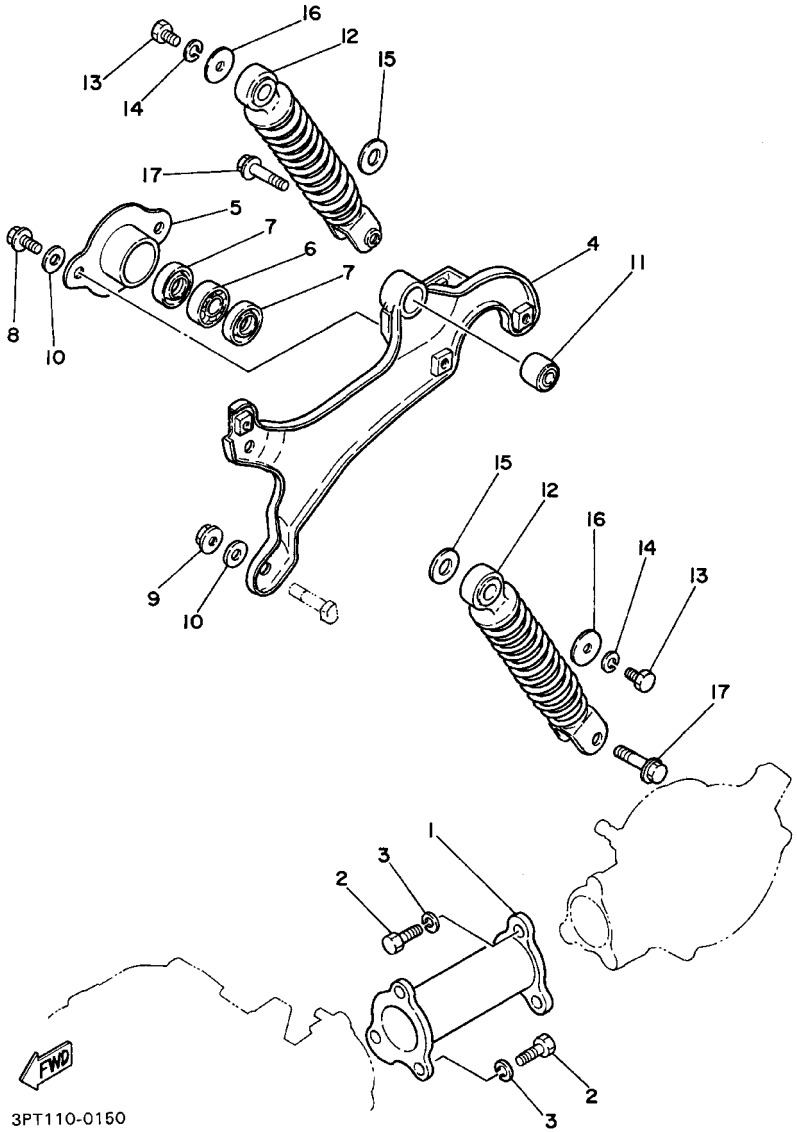

FIG. 15 REAR ARM. SUSPENSION

REF. NO.	PART NO.	DESCRIPTION	EUR	ZAF	JAN			REMARKS
1	3L7–22110–00–98	REAR ARM COMP.	1	1	1			LGB
2	90101–08461	BOLT	6	6	6			
3	92907–08100	WASHER, SPRING	6	6	6			
4	4X4–22110–01	REAR ARM COMP.	1	1	1			
5	4J2–22174–01	END 1	1	1	1			
6	93306–20117	BEARING	1	1	1			
7	93106–24018	OIL SEAL	2	2	2			
8	90105–08066	BOLT, WASHER BASED	2	2	2			
9	95707–08500	NUT, FLANGE	2	2	2			
10	90201–08326	WASHER, PLATE	4	4	4			
11	164–22216–00	BUSH, REAR SHOCK ABSORBER	1	1	1			
12	3PT–22210–00–35	SHOCK ABSORBER ASSY, REAR	2	2	2			SL
13	97027–06016	BOLT	2	2	2			
14	92907–06100	WASHER, SPRING	2	2	2			
15	90201–126A7	WASHER, PLATE	2	2	2			
16	90201–067A0	WASHER, PLATE	2	2	2			
17	90105–08121	BOLT, WASHER BASED	2	2	2			

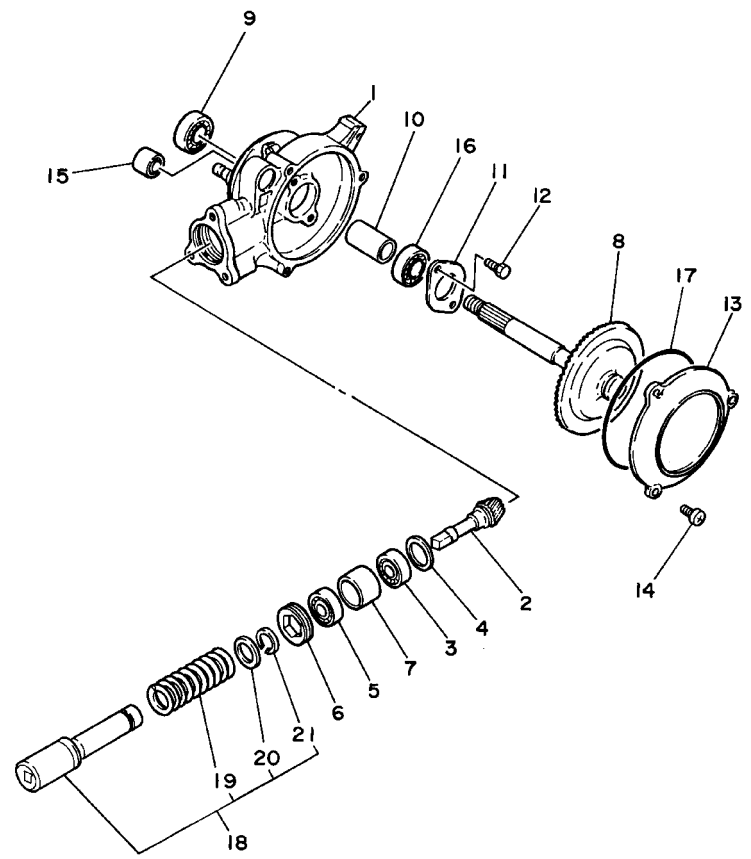

3PT110-0160

FIG. 16 DRIVE SHAFT

REF. NO.	PART NO.	DESCRIPTION	EUR	ZAF	JAN			REMARKS
1	4J2–46151–01	HOUSING, DRIVE SHAFT	1	1	1			
2	59M–46121–00	GEAR, DRIVE PINION	1	1	1			
3	93306–20111	BEARING (B6201)	1	1	1			
4	3L5–46127–00	SHIM, DRIVE PINION	1	1	1			
5	93306–20111	BEARING (B6201)	1	1	1			
6	90149–35133	SCREW	1	1	1			
7	90560–25185	SPACER	1	1	1			
8	4J2–46110–01	RING GEAR COMP.	1	1	1			
9	93306–20203	BEARING (B6202RS)	1	1	1			
10	90560–15315	SPACER	1	1	1			
11	3L5–46114–00	PLATE, COVER	1	1	1			
12	97017–06016	BOLT	2	2	2			
13	4J2–46154–02	COVER, HOUSING	1	1	1			
14	95027–06016	BOLT, FLANGE	3	3	3			
15	164–22216–00	BUSH, REAR SHOCK ABSORBER	1	1	1			
16	93306–20205	BEARING (B6202)	1	1	1			
17	93211–066A9	O–RING	1	1	1			
18	3L7–46171–00	SHAFT DRIVE ASSY	1	1	1			
19	90501–60556	.SPRING, COMPRESSION	1	1	1			
20	15L–18473–00	.RETAINER, SPRING	1	1	1			
21	93440–17138	.CIRCLIP	1	1	1			

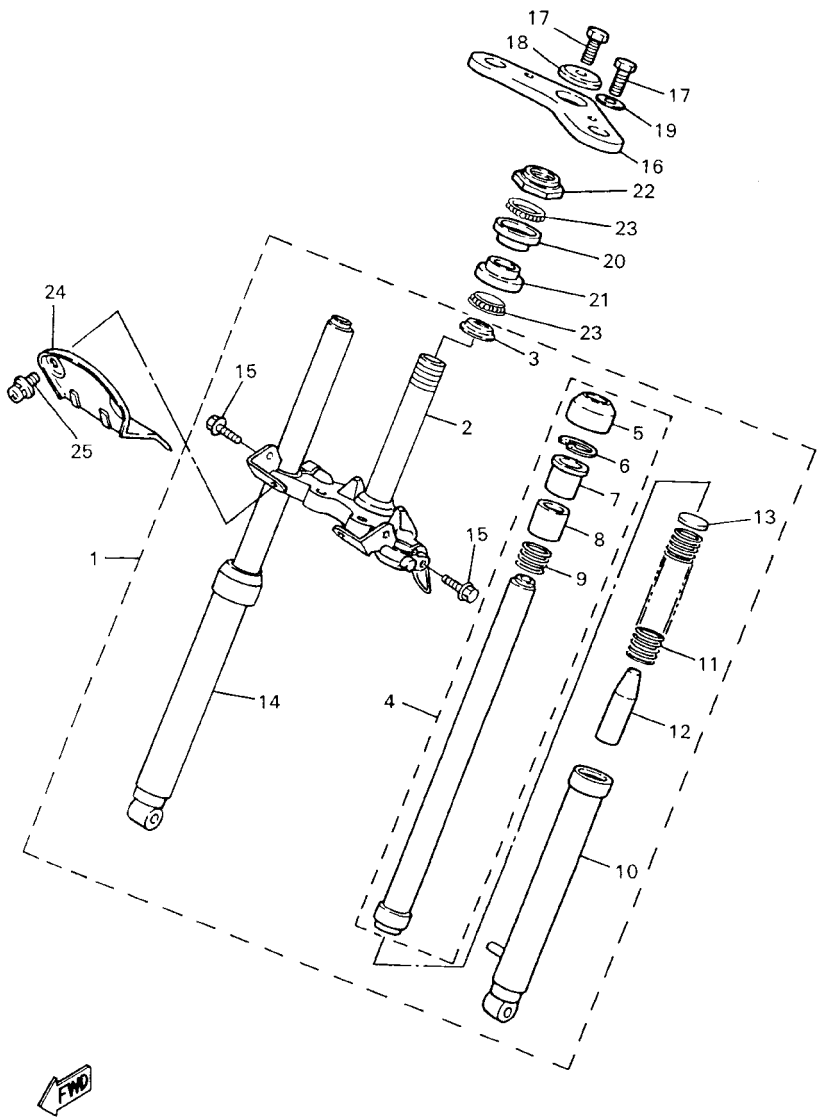

5PG2300-1170

FIG. 17 FRONT FORK

REF. NO.	PART NO.	DESCRIPTION	EUR	ZAF	JAN			REMARKS
1	3PT–23100–01–35	FRONT FORK ASSY	1	1	1			SL
2	3PT–23340–00	.UNDER BRACKET COMP.	1	1	1			
3	3YJ–23414–00	.RACE, BALL 4	1	1	1			
4	3PT–23110–00	.INNER TUBE COMP.1	1	1	1			
5	2E9–23144–01	..SEAL, DUST	1	1	1			
6	93450–30057	..CIRCLIP	1	1	1			
7	54V–23125–02	..METAL, SLIDE 1	1	1	1			
8	2E9–23113–01	..COLLAR	1	1	1			
9	36R–23151–00	..SPRING, REBOUND	1	1	1			
10	4X4–23106–00–35	.OUTER TUBE COMP. (L.H)	1	1	1			SL
11	4X4–23141–00	.SPRING, FRONT FORK	1	1	1			
12	3L6–23195–00	.RUBBER	1	1	1			
13	2E9–23143–00	.SEAT, SPRING LOWER	1	1	1			
14	3PT–23103–00–35	.FRONT FORK ASSY (R.H)	1	1	1			SL
15	95027–08030	.BOLT, FLANGE	2	2	2			
16	4X4–23435–00	CROWN, HANDLE	1	1	1			UNI CHROME (BLACK)
17	90105–10006	BOLT, WASHER BASED	3	3	3			
18	90209–10160	WASHER	1	1	1			
19	90201–105H3	WASHER, PLATE	2	2	2			
20	2E9–23412–00	RACE, BALL 2	1	1	1			
21	2E9–23413–01	RACE, BALL 3	1	1	1			
22	3PT–23411–00	RACE, BALL 1	1	1	1			
23	93505–32042	BALL	2	2	2			
24	4X4–21543–00	PLATE 1	1	1	1			
25	90159–06060	SCREW, WITH WASHER	2	2	2			

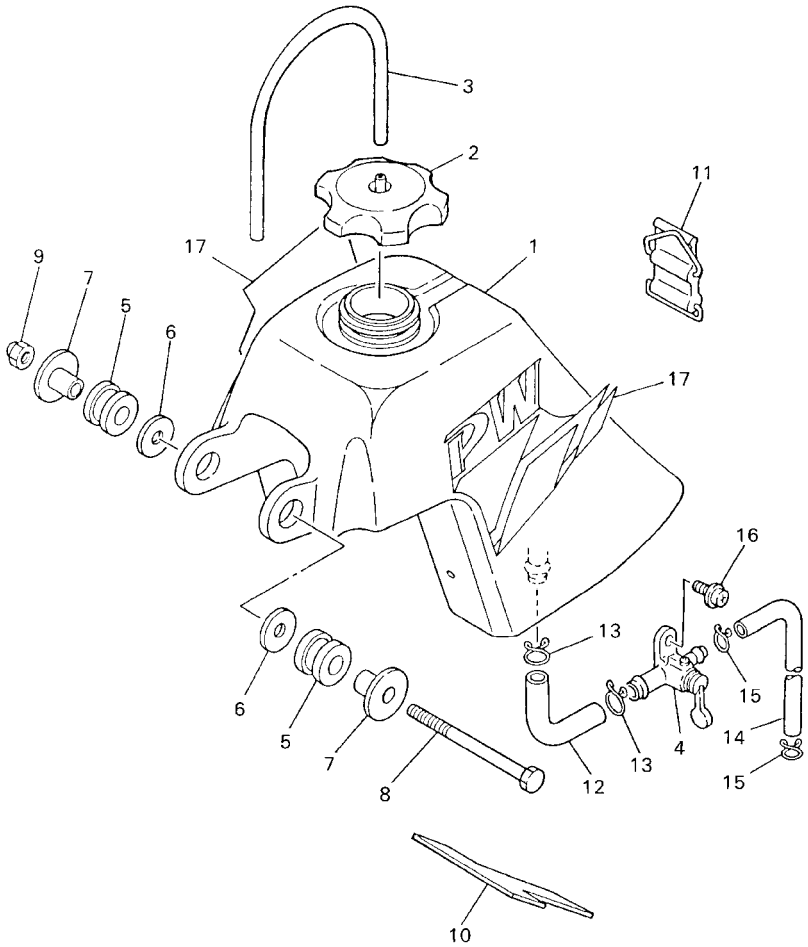

5PG3100-2180

FIG. 18 FUEL TANK

REF. NO.	PART NO.	DESCRIPTION	EUR	ZAF	JAN			REMARKS
1	3PT–24110–20	FUEL TANK COMP.	1	1	1			
2	2FG–24610–00	CAP ASSY	1	1	1			
3	90445–09251	HOSE (L350)	1	1	1			
4	4X4–24500–00	FUEL COCK ASSY 1	1	1	1			
5	90480–18290	GROMMET	2	2	2			
6	90201–06747	WASHER, PLATE	2	2	2			
7	90387–077F4	COLLAR	2	2	2			
8	97007–06085	BOLT	1	1	1			
9	90176–06038	NUT, CROWN	1	1	1			
10	3R0–24181–00	DAMPER, LOCATING 1	1	1	1			
11	59V–24173–00	BAND, TANK FITTING 1	1	1	1			
12	36E–24311–00	PIPE, FUEL 1	1	1	1			
13	90467–12052	CLIP	2	2	2			
14	90445–09074	HOSE (L130)	1	1	1			
15	90467–08003	CLIP	2	2	2			
16	90159–06013	SCREW, WITH WASHER	1	1	1			
17	3PT–24240–80	GRAPHIC SET	1	1	1			

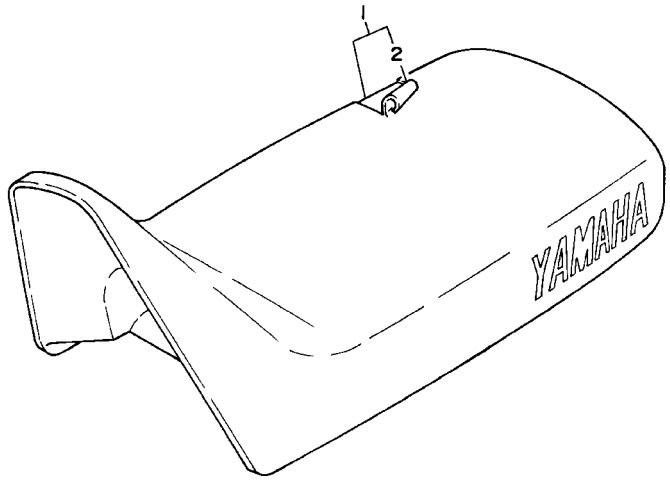

3PT110-0190

FIG. 19 SEAT

REF. NO.	PART NO.	DESCRIPTION	EUR	ZAF	JAN			REMARKS
1	3PT–24710–41	SINGLE SEAT ASSY	1	1	1			
2	3PT–24731–40	.COVER, SEAT	1	1	1			

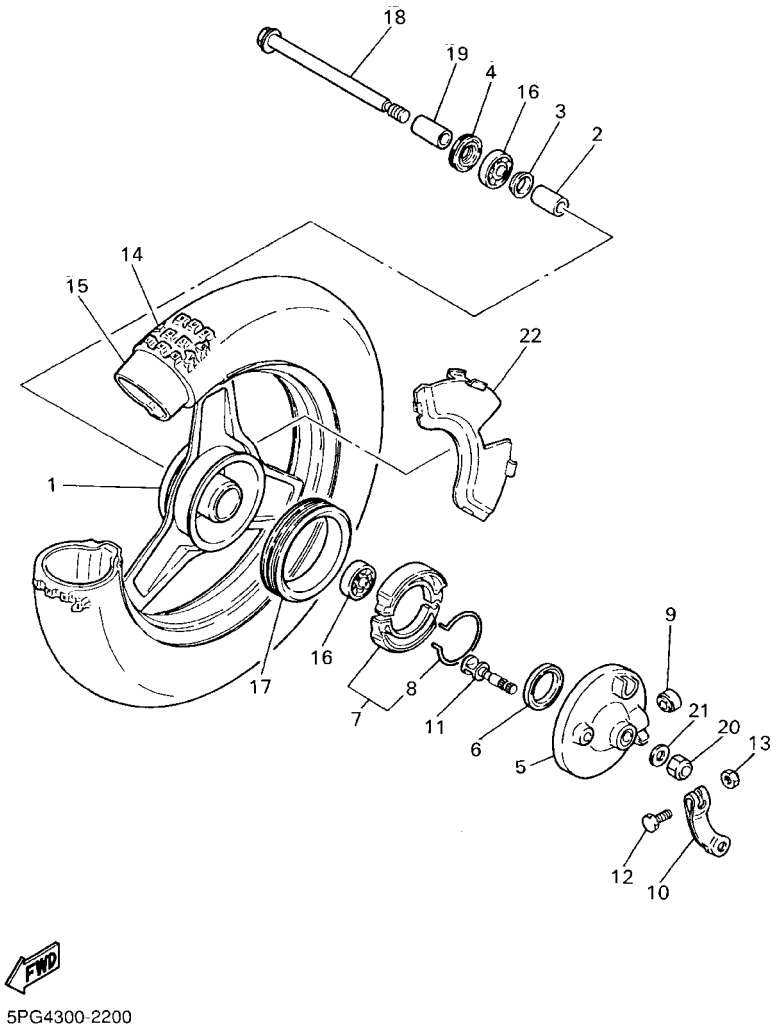

5PG4300-2200

FIG. 20 FRONT WHEEL

REF. NO.	PART NO.	DESCRIPTION	EUR	ZAF	JAN			REMARKS
1	5M0–25180–00–UJ	WHEEL COMP.	1	1	1			RW
2	90560–10173	SPACER	1	1	1			
3	2E9–25116–00	FLANGE, SPACER 2	1	1	1			
4	93106–17015	OIL SEAL	1	1	1			
5	2T4–25121–00–98	PLATE, BRAKE SHOE	1	1	1			LGB
6	93109–34057	OIL SEAL	1	1	1			
7	3PT–W253A–10	BRAKE SHOE KIT	1	1	1			
8	2E9–25133–00	.SPRING, RETURN	1	1	1			
9	90336–15033	PLUG, TAPER	1	1	1			
10	2T4–25155–00	LEVER, CAMSHAFT 1	1	1	1			
11	2E9–25151–01	CAMSHAFT	1	1	1			
12	97007–05020	BOLT	1	1	1			
13	95307–05600	NUT	1	1	1			
14	94125–10650	TIRE (2.50–10)	1	1	1			UR INOUE
	94125–10651	TIRE (2.50–10 4PR M29)	1	1	1			UR BRIDGESTONE
15	94225–10270	TUBE (2.50/2.75–10)	1	1	1			INOUE
16	93306–20006	BEARING (B6200)	2	2	2			NTN
17	2T4–25185–00	RING 1	1	1	1			
18	4N0–25181–01	AXLE, WHEEL	1	1	1			
19	90387–10620	COLLAR	1	1	1			
20	90185–10091	NUT, SELF–LOCKING	1	1	1			
21	92903–10200	WASHER, PLAIN	1	1	1			
22	36E–2539F–00	PLATE 1	3					

FIG. 21 REAR WHEEL

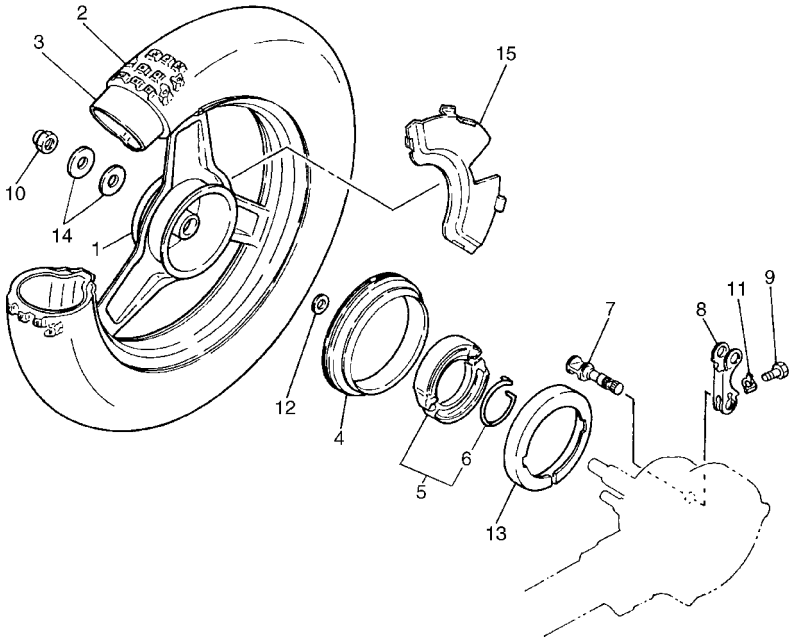

5PG4300-2210

REF. NO.	PART NO.	DESCRIPTION	EUR	ZAF	JAN			REMARKS
1	5M0–25390–00–UJ	REAR WHEEL COMP.	1	1	1			RW
2	94125–10650	TIRE (2.50–10)	1	1	1			UR INOUE
	94125–10651	TIRE (2.50–10 4PR M29)	1	1	1			UR BRIDGESTONE
3	94225–10270	TUBE (2.50/2.75–10)	1	1	1			INOUE
4	2T4–25185–00	RING 1	1	1	1			
5	3PT–W253A–10	BRAKE SHOE KIT	1	1	1			
6	2E9–25133–00	.SPRING, RETURN	1	1	1			
7	3L5–25351–00	CAMSHAFT	1	1	1			
8	3L5–25355–00	LEVER, CAMSHAFT	1	1	1			
9	90101–05396	BOLT	1	1	1			
10	90185–12046	NUT, SELF–LOCKING	1	1	1			
11	2E9–25412–00	WASHER	1	1	1			
12	90201–15700	WASHER, PLATE	1	1	1			
13	4X4–25336–00	RING 2	1	1	1			
14	90387–125A5	COLLAR	2	2	2			
15	36E–2539F–00	PLATE 1	3					

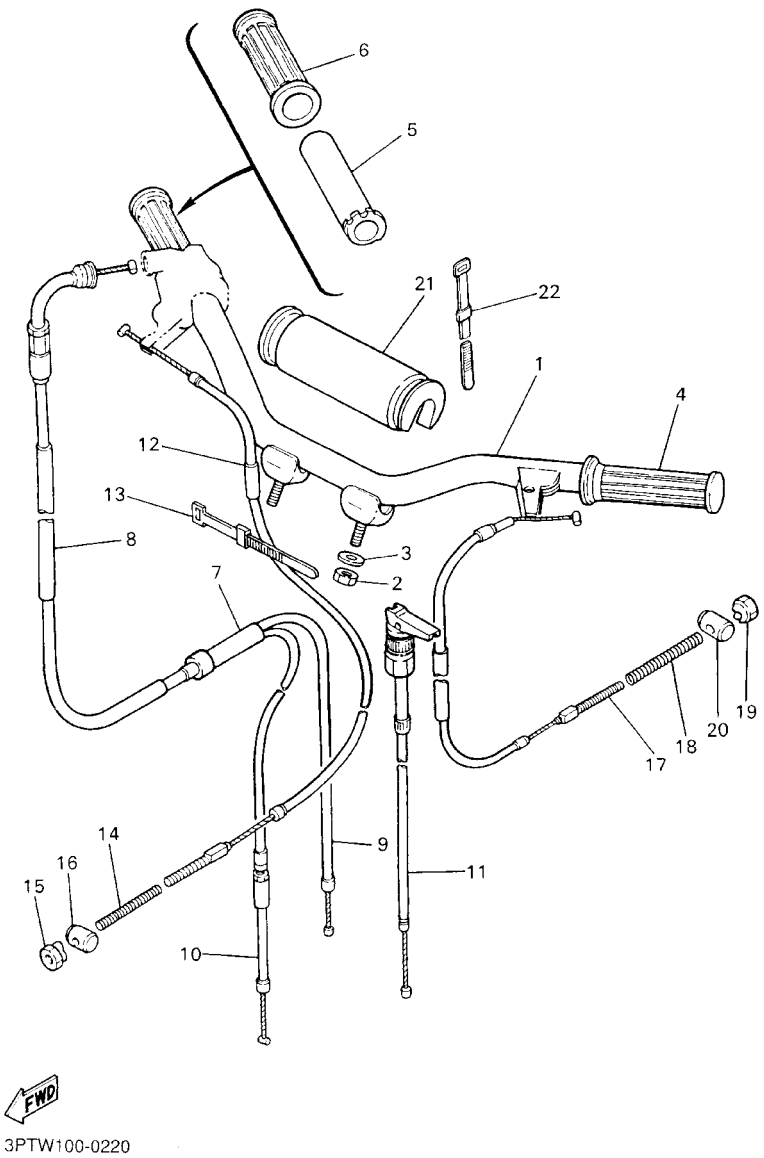

FIG. 22 STEERING HANDLE. CABLE

REF. NO.	PART NO.	DESCRIPTION	EUR	ZAF	JAN			REMARKS
1	3PT–26111–00	HANDLEBAR	1	1	1			
2	95607–08100	NUT, U	2	2	2			
3	2E9–26129–00	WASHER	2	2	2			
4	4X4–26241–00	GRIP	1	1	1			
5	4X4–26243–00	TUBE, THROTTLE GUIDE	1	1	1			
6	4X4–26242–00	GRIP (RIGHT)	1	1	1			
7	266–26261–00	CONNECTOR, CABLE	1	1	1			
8	4X4–26311–10	CABLE, THROTTLE 1	1	1	1			
9	4X4–26312–10	CABLE, THROTTLE 2	1	1	1			
10	4X4–26321–10	CABLE, PUMP	1	1	1			
11	4X4–26331–01	CABLE, STARTER 1	1	1	1			
12	3PT–26341–00	CABLE, BRAKE	1	1	1			
13	3TB–83936–00	BAND, SWITCH CORD	1	1	1			
14	90501–10513	SPRING, COMPRESSION	1	1	1			
15	90179–06411	NUT	1	1	1			
16	90249–12008	PIN	1	1	1			
17	4X4–26351–10	CABLE, BRAKE	1	1	1			
18	90501–10074	SPRING, COMPRESSION	1	1	1			
19	90179–06411	NUT	1	1	1			
20	90249–12008	PIN	1	1	1			
21	36R–26124–10	PROTECTOR, HANDLEBAR	1	1	1			YAMAHA BLACK
22	437–83936–11	BAND, SWITCH CORD	2	2	2			

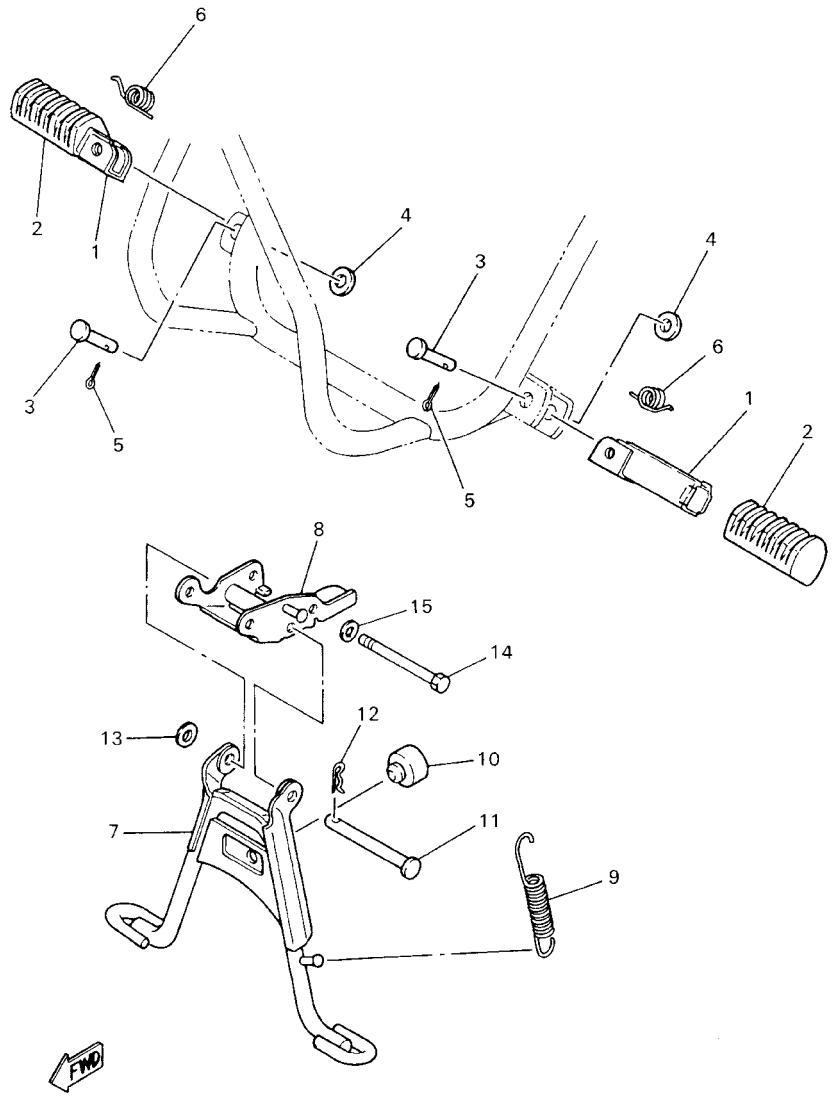

5PG1100-1230

FIG. 23 STAND. FOOTREST

REF. NO.	PART NO.	DESCRIPTION	EUR	ZAF	JAN			REMARKS
1	214–27421–00	FOOTREST 2	2	2	2			UNICHROME (BLACK)
2	4X4–27413–00	COVER, FOOTREST	2	2	2			
3	90240–08084	PIN, CLEVIS	2	2	2			
4	92907–08600	WASHER, PLATE	2	2	2			
5	91401–25015	PIN, COTTER	2	2	2			
6	90508–20023	SPRING, TORSION	2	2	2			
7	4X4–27111–00–33	STAND, MAIN	1	1	1			YB
8	3L5–27151–02	BRACKET, MAIN STAND	1	1	1			
9	90506–29052	SPRING, TENSION	1	1	1			
10	4X4–27114–00	STOPPER, MAIN STAND	1	1	1			
11	91701–08078	PIN, CLEVIS	1	1	1			
12	90468–12006	CLIP	1	1	1			
13	92907–08600	WASHER, PLATE	1	1	1			
14	91317–06070	BOLT	2	2	2			
15	90201–06045	WASHER, PLATE	2	2	2			

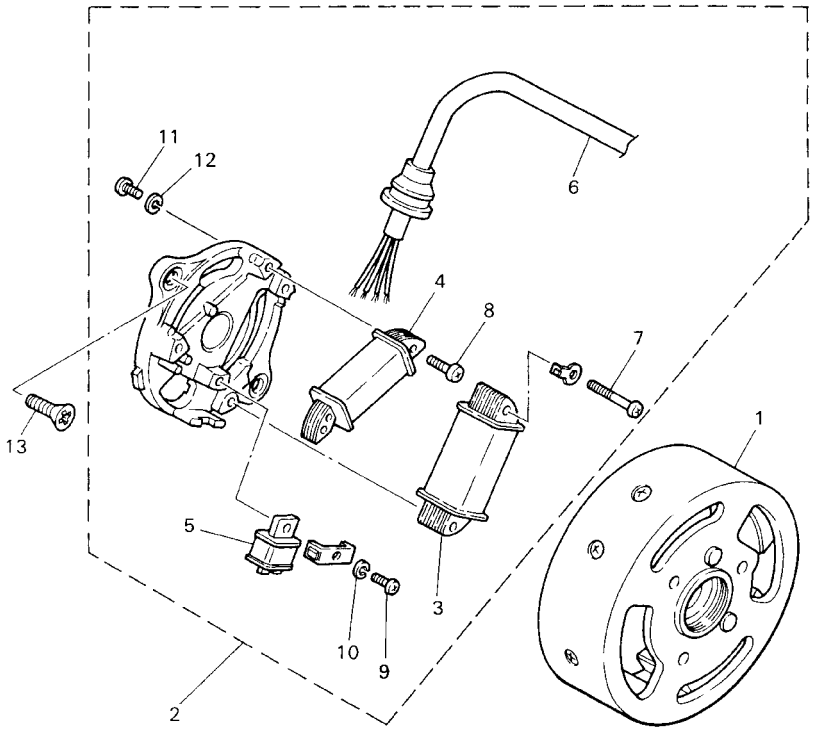

5PG1100-1240

FIG. 24 GENERATOR

REF. NO.	PART NO.	DESCRIPTION	EUR	ZAF	JAN			REMARKS
1	3L6–85550–M0	ROTOR ASSY	1	1	1			
2	3PT–85560–00	BASE ASSY	1	1	1			
3	4X4–81313–M0	.COIL, LIGHTING 1	1	1	1			
4	4Y4–85520–M0	.COIL, CHARGE	1	1	1			
5	3L5–85580–M0	.COIL, PULSER	1	1	1			
6	3PT–8131X–00	.CORD ASSY	1	1	1			
7	98517–04025	.SCREW, PAN HEAD	2	2	2			
8	98517–04012	.SCREW, PAN HEAD	2	2	2			
9	98507–04010	.SCREW, PAN HEAD	1	1	1			
10	92907–04100	.WASHER, SPRING	1	1	1			
11	98507–04006	.SCREW, PAN HEAD	1	1	1			
12	92907–04100	.WASHER, SPRING	1	1	1			
13	98707–06016	SCREW, FLAT HEAD	2	2	2			

FIG. 25 HANDLE SWITCH. LEVER

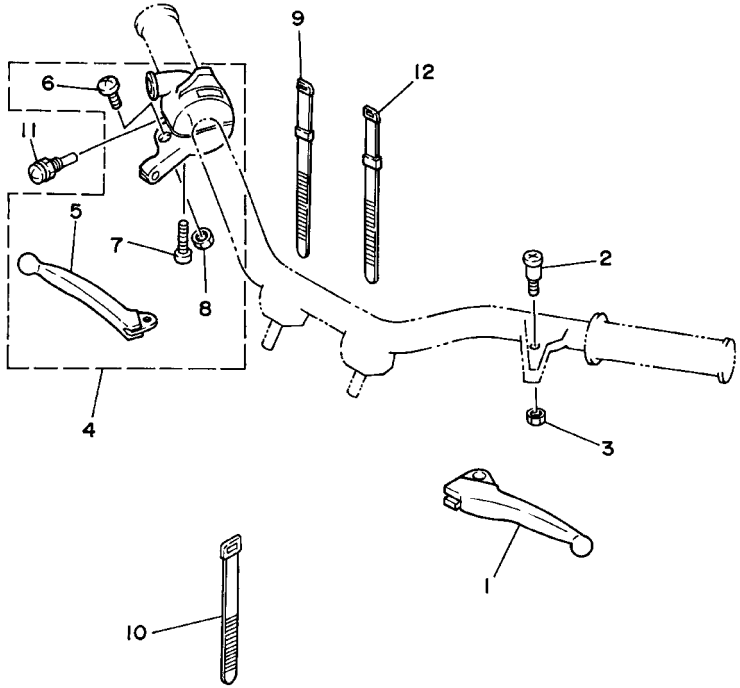

3PT110-0250

REF. NO.	PART NO.	DESCRIPTION	EUR	ZAF	JAN			REMARKS
1	2T4–83912–02	LEVER 1	1	1	1			
2	90149–05162	SCREW	1	1	1			
3	95607–05100	NUT, U	1	1	1			
4	3PT–82920–00	LEVER HOLDER ASSY (RIGHT)	1	1	1			
5	2T4–83922–02	.LEVER 2	1	1	1			
6	90149–05119	.SCREW	1	1	1			
7	98507–05025	.SCREW, PAN HEAD	2	2	2			
8	95607–05100	.NUT, U	1	1	1			
9	437–83936–01	BAND, SWITCH CORD	1	1	1			
10	3TB–83936–00	BAND, SWITCH CORD	1	1	1			
11	4X4–26257–00	STOPPER	1	1	1			
12	90465–10098	CLAMP	1	1	1			

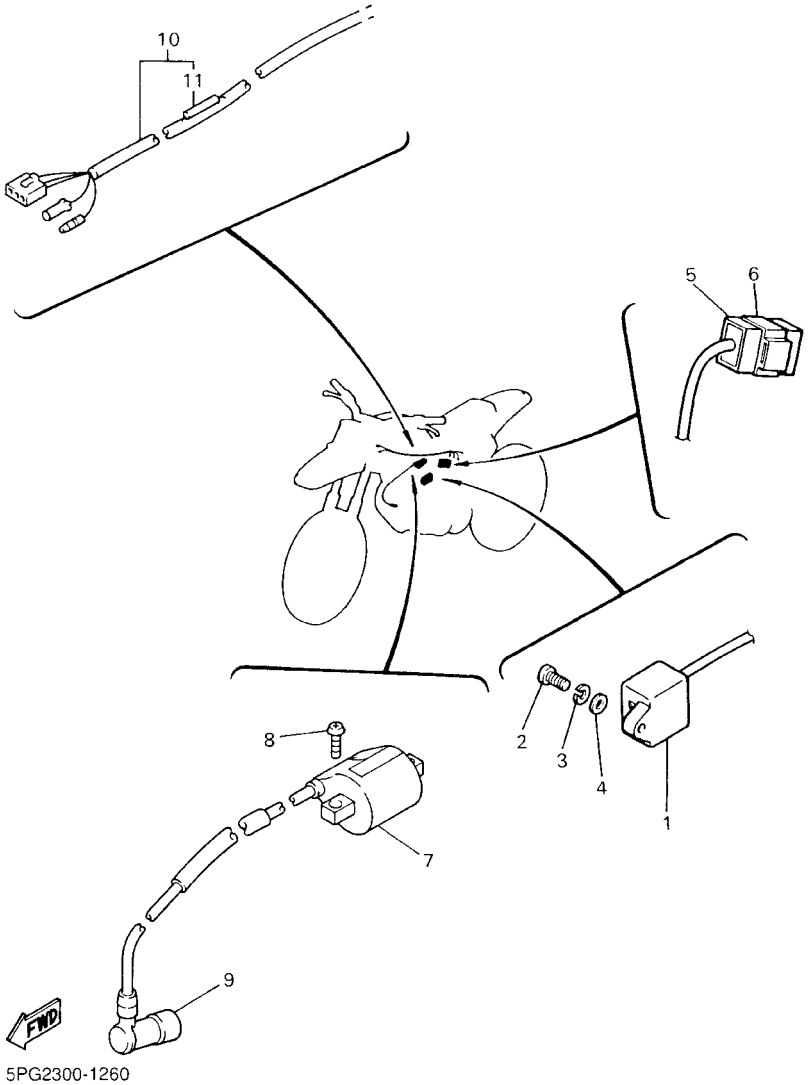

FIG. 26 ELECTRICAL 1

REF. NO.	PART NO.	DESCRIPTION	EUR	ZAF	JAN			REMARKS
1	3PT–85540–00	C.D.I. UNIT ASSY	1	1	1			
2	98507–06016	SCREW, PAN HEAD	1	1	1			
3	92907–06100	WASHER, SPRING	1	1	1			
4	92907–06600	WASHER, PLATE	1	1	1			
5	3PT–85590–00	CONTROL UNIT ASSY	1	1	1			
6	4J2–85546–00	BAND	1	1	1			
7	4JP–82310–00	IGNITION COIL ASSY	1	1	1			
8	98507–06016	SCREW, PAN HEAD	2	2	2			
9	166–82370–20	PLUG CAP ASSY	1	1	1			
10	3PT–82590–10	WIRE HARNESS ASSY	1	1	1			
11	3K7–81980–00	.DIODE ASSY	1	1	1			

NUMERICAL INDEX

PART NO.	GRID NO.
3PT–W253A–10	C – 8
	C – 9
4J2–11111–00	B – 2
517–11181–00	B – 2
4J2–11311–00	B – 2
3PT–11351–00	B – 2
3L5–11400–01	B – 3
3L5–11412–00	B – 3
3L5–11422–01	B – 3
260–11610–04	B – 3
260–11610–14	B – 3
260–11610–24	B – 3
18U–11631–00–A0	B – 3
3L5–11633–00	B – 3
18U–11635–00	B – 3
18U–11636–00	B – 3
2E9–11651–00	B – 3
54U–11681–00	B – 3
3L5–13101–00	B – 4
3L5–13124–00	B – 4
384–13138–00	B – 4
3L5–13161–00	B – 4
3L5–13178–00	B – 10
3L5–13555–00	B – 5
3L5–13610–00	B – 5
3L5–13613–00	B – 5
3L5–13616–00	B – 5
3HK–13621–00	B – 5
3L5–13622–10	B – 5
3L5–13624–00	B – 5
4X4–14101–00	B – 6
36R–14103–00	B – 6
17L–14104–00	B – 6
17L–14106–00	B – 6
3L5–14112–40	B – 6
174–14131–01	B – 6
509–14135–00	B – 6
3L7–14141–12	B – 6
3L5–14142–40	B – 6
1R0–14169–00	B – 6
127–14171–00	B – 6
3L5–14184–00	B – 6
3L6–14185–01	B – 6
603–14186–00	B – 6
3L5–14190–01	B – 6
214–14197–00	B – 6
3L5–14198–00	B – 6
620–14231–13	B – 6
620–14231–14	B – 6
620–14231–15	B – 6
1V3–14271–00	B – 7
4X4–14411–00	B – 5
4X4–14412–00	B – 5
4X4–14451–00	B – 5
4X4–14453–00	B – 5
4X4–14493–01	B – 5
4X4–14610–01	B – 8
4X4–14623–10	B – 8
4X4–14708–00	B – 8
4X4–14714–00	B – 8
4X4–14750–00	B – 8
3RV–14766–00	B – 8
36R–1490J–00	B – 6
1M3–14997–00	B – 7
4X4–15111–00	B – 9
4J2–15113–00	B – 9
4J2–15121–01	B – 9
3L5–15128–00	B – 9
2E9–15316–00	B – 9
4J2–15363–00	B – 9
4J2–15415–00	B – 9
3L5–15416–00	B – 4
4X4–15421–02	B – 9
3L5–15426–00	B – 4
3L5–15451–11	B – 9
4X4–15484–00	B – 9
4X4–15491–00	B – 9
3L5–15601–00	B – 10
2T4–15618–00	B – 10
17J–15620–01	B – 10
3L5–15631–00	B – 10
3L5–15664–00	B – 10
3L5–15673–00	B – 10
3L5–16111–00	B – 11
3L5–16114–00	B – 11
3L5–16115–00	B – 11
3L5–16125–00	B – 11
3L5–16181–01	B – 11
3L5–16611–02	B – 11
3L5–16620–03	B – 11
3L5–16627–02	B – 11
3L5–16628–02	B – 11
2T4–16629–00	B – 11
3L5–16633–02	B – 11
3L5–17112–01	B – 9
3L5–17410–00	B – 12
3L5–17442–00	B – 12
3L5–17471–00	B – 12
3L5–17473–00	B – 12
3L5–17531–00	B – 12
3L5–17537–00	B – 12
15L–17552–00	B – 12
15L–18473–00	C – 4
36E–21110–01–33	B – 13
3PT–21511–20	B – 14
36E–21513–00	B – 14
4X4–21543–00	C – 5
3PT–21569–70	B – 14
4X4–21629–00	C – 2
3PT–21711–10	B – 15
4X4–2172K–00	C – 2
3PT–2173L–60	B – 15
3PT–21731–60	B – 15
3PT–21741–60	B – 15
4X4–21751–00	C – 2
4X4–21766–01	C – 2
1Y1–21770–01	C – 2
4X4–21773–00	C – 2
3L7–22110–00–98	C – 3
4X4–22110–01	C – 3
4J2–22174–01	C – 3
3PT–22210–00–35	C – 3
164–22216–00	C – 3
	C – 4
3PT–23100–01–35	C – 5
3PT–23103–00–35	C – 5
4X4–23106–00–35	C – 5
3PT–23110–00	C – 5
2E9–23113–01	C – 5
54V–23125–02	C – 5
4X4–23141–00	C – 5
2E9–23143–00	C – 5
2E9–23144–01	C – 5
36R–23151–00	C – 5
3L6–23195–00	C – 5
3PT–23340–00	C – 5
3PT–23411–00	C – 5
2E9–23412–00	C – 5
2E9–23413–01	C – 5
3YJ–23414–00	C – 5
4X4–23435–00	C – 5
3PT–24110–20	C – 6
59V–24173–00	C – 6
3R0–24181–00	C – 6
4X4–24181–00	B – 15
3PT–24240–80	C – 6
36E–24311–00	C – 6
4X4–24500–00	C – 6
2FG–24610–00	C – 6
3PT–24710–41	C – 7
3PT–24731–40	C – 7
2E9–25116–00	C – 8
2T4–25121–00–98	C – 8
2E9–25133–00	C – 8
	C – 9
2E9–25151–01	C – 8
2T4–25155–00	C – 8
5M0–25180–00–UJ	C – 8
4N0–25181–01	C – 8
2T4–25185–00	C – 8
	C – 9
4X4–25336–00	C – 9
3L5–25351–00	C – 9
3L5–25355–00	C – 9
36E–2539F–00	C – 8
	C – 9
5M0–25390–00–UJ	C – 9
2E9–25412–00	C – 9
3PT–26111–00	C – 10
36R–26124–10	C – 10
2E9–26129–00	C – 10
4X4–26241–00	C – 10
4X4–26242–00	C – 10
4X4–26243–00	C – 10
4X4–26257–00	C – 13
266–26261–00	C – 10
4X4–26311–10	C – 10
4X4–26312–10	C – 10
4X4–26321–10	C – 10
4X4–26331–01	C – 10
3PT–26341–00	C – 10
4X4–26351–10	C – 10
4X4–27111–00–33	C – 11
4X4–27114–00	C – 11
3L5–27151–02	C – 11
4X4–27413–00	C – 11
214–27421–00	C – 11
4X4–28100–00	B – 15
4J2–46110–01	C – 4
3L5–46114–00	C – 4
59M–46121–00	C – 4
3L5–46127–00	C – 4
4J2–46151–01	C – 4
4J2–46154–02	C – 4
3L7–46171–00	C – 4
3PT–8131X–00	C – 12
4X4–81313–M0	C – 12
3K7–81980–00	C – 14
4JP–82310–00	C – 14
166–82370–20	C – 14
3PT–82590–10	C – 14
3PT–82920–00	C – 13
2T4–83912–02	C – 13
2T4–83922–02	C – 13
3TB–83936–00	C – 10
	C – 13
437–83936–01	C – 13
437–83936–11	C – 10
4Y4–85520–M0	C – 12
3PT–85540–00	C – 14
4J2–85546–00	C – 14
3L6–85550–M0	C – 12
3PT–85560–00	C – 12
3L5–85580–M0	C – 12
3PT–85590–00	C – 14
90101–05396	C – 9
90101–08461	C – 3
90105–08066	C – 3
90105–08103	B – 9
90105–08121	C – 3
90105–10006	C – 5
90105–10731	B – 13
90109–08582	B – 9
90116–06418	B – 2
90119–06060	B – 15
90149–04135	B – 4
90149–05119	C – 13
90149–05162	C – 13
90149–06113	B – 8
90149–35133	C – 4
90149–45134	B – 12
90157–05003	B – 8
90159–06013	B – 5
	C – 6
90159–06058	B – 15
90159–06060	B – 14
	B – 15
	C – 5
90170–10105	B – 4
90170–10206	B – 11
90176–06038	C – 6
90179–06411	C – 10
90185–10091	C – 8
90185–12046	C – 9
90201–06045	C – 11
90201–067A0	C – 3
90201–06747	C – 6
90201–08326	C – 3
90201–105H3	C – 5
90201–126A7	C – 3
90201–15700	C – 9
90201–16383	B – 11
90202–04214	B – 8
90208–10012	B – 11
90209–10160	C – 5
90240–08084	C – 11
90249–12008	C – 10
90280–03017	B – 3
90282–05034	B – 11
90336–15033	C – 8
90387–077F4	C – 6
90387–10620	C – 8
90387–125A5	C – 9
90387–16730	B – 11
90401–10029	B – 4
90430–04004	B – 4
90430–08119	B – 9
90445–09074	C – 6
90445–09251	C – 6
90465–10098	C – 13
90467–08003	C – 2
	C – 6
90467–12052	C – 6
90467–20023	B – 5
90467–22048	B – 8
90468–02033	B – 4
90468–12006	C – 11
90480–10408	C – 2
90480–18290	C – 6
90501–08410	C – 2
90501–10074	C – 10
90501–10513	C – 10
90501–60556	C – 4
90506–29052	C – 11
90508–20023	C – 11
90508–28399	B – 10
90560–10173	C – 8
90560–15315	C – 4

NUMERICAL INDEX

PART NO.	GRID NO.
90560–25185	C – 4
91317–06070	C – 11
91318–06016	B – 12
91401–25015	C – 11
91609–30014	B – 4
91701–08078	C – 11
92902–05100	B – 6
92903–10200	C – 8
92907–03100	B – 5
92907–04100	C – 12
92907–06100	B – 8
	B – 9
	C – 3
	C – 14
92907–06600	B – 5
	B – 8
	C – 14
92907–08100	B – 8
	C – 3
92907–08600	B – 8
	C – 11
92907–12100	B – 3
92907–12600	B – 3
93101–10001	B – 4
93102–15267	B – 12
93102–17067	B – 3
93102–23174	B – 3
93106–17015	C – 8
93106–24018	C – 3
93109–15001	B – 10
93109–34057	C – 8
93210–14104	B – 9
93210–26240	B – 4
93211–066A9	C – 4
93306–20006	C – 8
93306–20111	C – 4
93306–20117	C – 3
93306–20203	C – 4
93306–20205	C – 4
93306–20301	B – 12
93306–20326	B – 3
93310–21038	B – 3
93310–416N7	B – 3
93430–07012	B – 4
93440–17138	C – 4
93450–11021	B – 3
93450–30057	C – 5
93505–32042	C – 5
94125–10650	C – 8
	C – 9
94125–10651	C – 8
	C – 9
94225–10270	C – 8
	C – 9
94701–00258	B – 2
94703–00258	B – 2
95027–06016	C – 4
95027–08030	C – 5
95307–05600	C – 8
95307–12700	B – 3
95607–05100	C – 13
95607–08100	C – 10
95607–10200	B – 13
95707–06500	B – 2
95707–08500	C – 3
97007–05020	C – 8
97007–06016	B – 8
97007–06085	C – 6
97007–08020	B – 8
97017–06016	C – 4
97017–06025	B – 10
97027–06016	C – 3
97707–50115	B – 4
98502–04014	B – 6
98502–05012	B – 6
98502–05030	B – 6
98507–03010	B – 5
98507–04006	C – 12
98507–04010	C – 12
98507–05014	B – 9
98507–05020	B – 4
98507–05025	C – 13
98507–05035	B – 4
98507–06008	B – 8
98507–06012	B – 9
98507–06016	C – 14
98507–06020	B – 5
98507–06025	B – 9
98507–06035	B – 9
98507–06045	B – 5
	B – 9
98517–04012	C – 12
98517–04025	C – 12
98707–06016	C – 12
98802–05100	B – 6
99009–16400	B – 11
99530–12016	B – 9

CONTENTS

ENGINE

CYLINDER B2
CRANKSHAFT. PISTON B3
OIL PUMP B4
INTAKE B5
CARBURETOR B6
EXHAUST B8
CRANKCASE B9
STARTER B10
CLUTCH B11
TRANSMISSION B12

CHASSIS

FRAME B13
FRONT FENDER B14
SIDE COVER B15
OIL TANK C2
REAR ARM. SUSPENSION C3
DRIVE SHAFT C4
FRONT FORK C5
FUEL TANK C6
SEAT C7
FRONT WHEEL C8
REAR WHEEL C9
STEERING HANDLE. CABLE C10
STAND. FOOTREST C11
GENERATOR C12
HANDLE SWITCH. LEVER C13
ELECTRICAL 1 . . . . . C14

INDEX

NUMERICAL INDEX M1